AXOR

hansgrohe

Talis E
Single lever basin mixer 110 without waste set
Surfaces: **Chrome** Article Number: **71712000**

Description

product features

- ComfortZone 110
- projection 112 mm
- maximum flow rate at 3 bar: 5 l/min
- ceramic cartridge
- temperature limitation adjustable
- suitable for continuous flow water heaters
- connection type: G ⅜ connections
- connection dimension: DN15

Technology

AirPower | EcoSmart | Comfort Zone | Quick Clean

Design awards

DESIGN AWARD 2020 | GERMAN DESIGN AWARD WINNER 2021 | ICONIC AWARDS 2021 INNOVATIVE INTERIOR winner | ICONIC AWARDS 2020 INNOVATIVE ARCHITECTURE best of best

Product image

Scale drawing

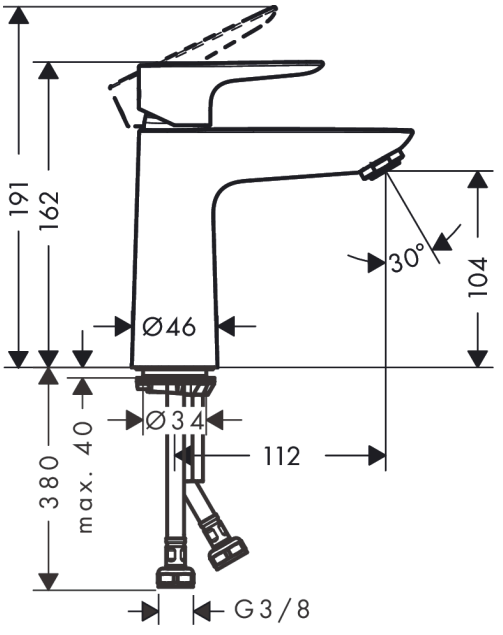

Flowchart

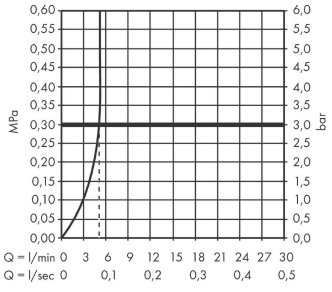

Talis E
Single lever basin mixer 110 without waste set
Surfaces: **Chrome** Article Number: **71712000**

Exploded Drawing

Year of production: **>05/17**

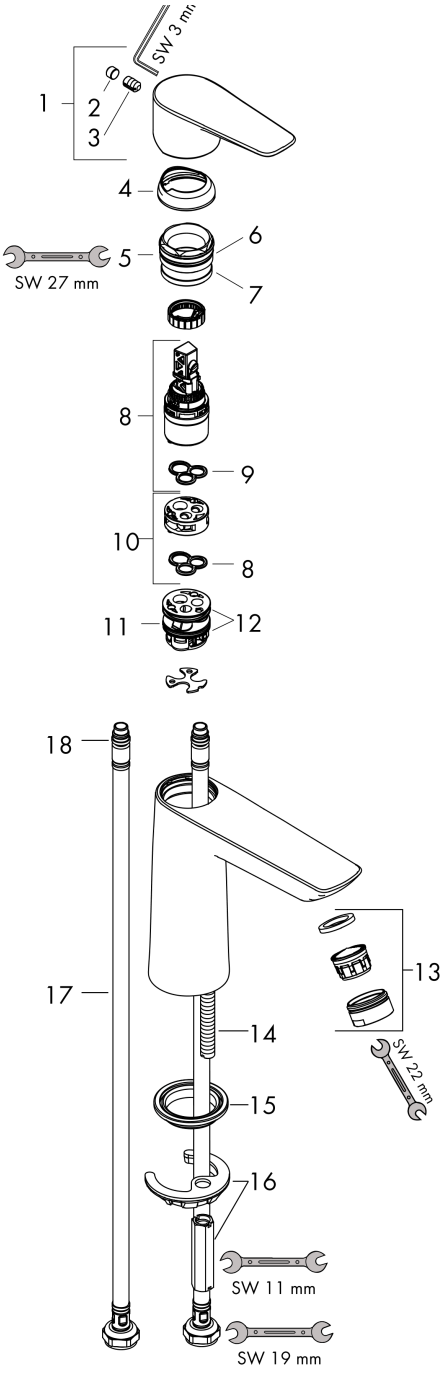

AXOR hansgrohe

Talis E
Single lever basin mixer 110 without waste set
Surfaces: **Chrome** Article Number: **71712000**

Spare part list

Year of production: **>05/17**

Pos.	Description	Article Number	Price	PU
1	handle	92687000	-	1
2	screw cover	95704000	-	1
3	hollow set screw M6x10 DIN 916	96029000	-	1
4	flange	92625000	-	1
5	nut	92689000	-	1
6	O-ring 25x1,5	98146000	-	1
7	O-ring 27x1,5	92527000	-	1
8	cartridge, assy	97685000	-	1
9	seal	98865000	-	1
10	adapter for cartridge	92628000	-	1
11	adapter for cartridge	98866000	-	1
12	O-ring 23x2	98398000	-	1
13	aerator M24x1 (5 l/min)	13185000	-	1
14	screw M8 x 68	97736000	-	1
15	seal	97608000	-	1
16	fixing set	96016000	-	1
17	connection hose 450 mm M8x0,75 G3/8	97206000	-	1
18	O-ring 6,6x1,6	93019000	-	1